09766E00

- Enclosure made of glass fibre reinforced polyester resin
- Modular design
- 3 sizes available
- Individual units can be combined into larger units
- Standard and customer-specific versions
- With contact elements 8208 for open-circuit and short-circuit monitoring
- Versions with contact elements 8082 and 8208 for use up to SIL 2 and SIL 3, respectively

The control device system ConSig Series 8040 makes it possible to assemble different control units in a clear layout.
Due to the three available sizes and the modular design, the devices can be used for almost every application.
As an option, flanges made of brass or polyester resin, metal plates for the assembly of cable entries and an attachable equipment identification plate are available.

	ATEX / IECEx / GOST					
Zone	0	1	2	20	21	22
For use		x	x		x	x

	NEC 505			NEC 506		
	Class I					
Zone	0	1	2	20	21	22
For use in		x	x			

	NEC 500					
	Class I		Class II		Class III	
Division	1	2	1	2	1	2
For use in		x	x*	x	x	x

x* = 8040/1 Canada

WebCode 8040B

Selection Table

Version					Order number	Weight kg
Pushbutton 01646E00		green	09240E00	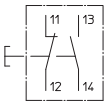 08002E00	**8040/1180X-01L50BA05**	0.370
		red	05596E00			
Mushroom pushbutton 05792E00	Ø 38 mm	black	12627E00	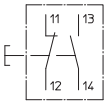 08002E00	**8040/1180X-03L24BA05**	0.400
Mushroom stay-put button 05512E00	Ø 38 mm EM-STOP	red	05600E00	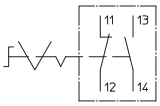 08793E00	**8040/1180X-10L07BA05**	0.400
	Ø 38 mm EM-STOP	red	05600E00	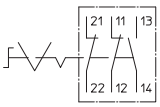 08749E00	**8040/1180X-10L07BA08**	0.410
Mushroom stay-put button 04679E00	Ø 55 mm EM-STOP	red	05600E00	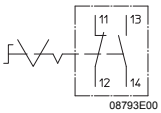 08793E00	**8040/1180X-15L07BA05**	0.400
Mushroom stay-put button (key lock, key release) 05769E00	Ø 38 mm EM-STOP	red		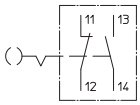 08005E00	**8040/1180X-09XXXBA05**	0.450

Selection Table

Version		Order number	Weight kg
Key-operated switch 05798E00	2 switching positions Key withdrawable in 0 + I 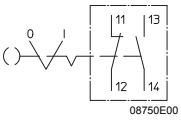 08750E00	**8040/1180X-08M01XA05**	0.450
Key-operated switch 05725E00	3 switching positions Key withdrawable in I + 0 + II 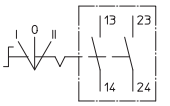 08752E00	**8040/1180X-08M03XA04**	0.450
Twin pushbutton 05710E00	green 09240E00 red 05596E00 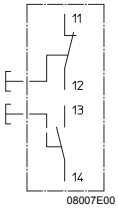 08007E00	**8040/1180X-23D01BA05**	0.400
LED illuminated pushbutton 05797E00	spring return All colour filters included (clear, red, yellow, green, blue) 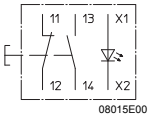 08015E00	**8040/1180X-35C06BA45**	0.400
LED indicating lamp 05800E00	All colour filters included (clear, red, yellow, green, blue) 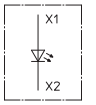 08006E00	**8040/1180X-54C06XXXX**	0.125

E4

Selection Table

Version		Order number	Weight kg
Selector switch with contact element 8082 05794E00	2 switching positions 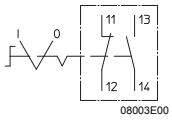	**8040/1180X-26M01XA05**	0.420
Selector switch with contact element 8082 05801E00	3 switching positions 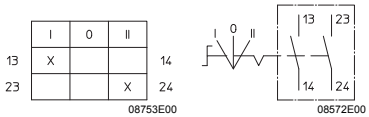	**8040/1180X-26M03XA04**	0.420
Control switch, 2 pole with switch element 8008 05791E00	**Control switch 8008, 2 pole** with large actuator, not padlockable Please state: • Contact arrangement, see switch 8008 • Labelling	**8040/1180Z-31E...F..**	0.440
Control switch, 2 pole with switch element 8008 05726E00	**Control switch 8008, 2 pole** with small actuator, padlockable in I position Please state: • Contact arrangement, see switch 8008 • Labelling	**8040/1180Z-34E..XF..**	0.420

Selection Table

Version				Order number	Weight kg
Control switch, 2 pole with switch element 8008 05711E00	**Control switch 8008, 2 pole** with small actuator, not padlockable Please state: • Contact arrangement, see switch 8008 • Labelling			**8040/1180Z-32E..XF..**	0.420
2 pushbuttons 05771E00		green red	09240E00 05596E00	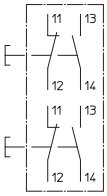 08008E00	**8040/1280X-01L13BA05-01L08BA05**	0.460
LED indicating lamp and pushbutton 05772E00	All colour filters included (clear, red, yellow, green, blue)	red	09767E00 05596E00	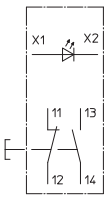 08009E00	**8040/1280X-54C06XXXX-01L08BA05**	0.460
LED indicating lamp and twin pushbutton 02314E00	All colour filters included (clear, red, yellow, green, blue)	green red	09767E00 09240E00 05596E00	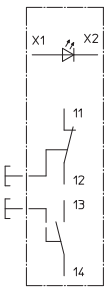 08010E00	**8040/1280X-54C06XXXX-23D01BA05**	0.540

E4

Selection Table

Version		Order number	Weight kg
Ammeter 8405 05576E00	**Ammeter 8405:** Please state: • Measurement range, see ammeter 8405 • Measuring method (direct = d or converter = W)	**8040/1280Z-40XXXXN..**	0.490
3 pushbuttons 05802E00	green 09240E00 red 05596E00 green 05598E00 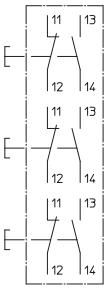 08011E00	**8040/1380X-01L13BA05-01L08BA05-01L15BA05**	0.580
LED indicating lamp and 2 pushbuttons 03118E00	All colour filters included (clear, red, yellow, green, blue) red 05596E00 green 05598E00 09767E00 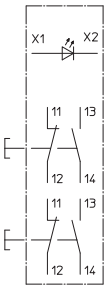 08012E00	**8040/1380X-54C06XXXX-01L13BA05-01L08BA05**	0.640

Selection Table

Version		Order number	Weight kg
LED indicating lamp, twin pushbutton and mushroom stay-put button (key lock, key release) 02315E00	All colour filters included (clear, red, yellow, green, blue) green 09767E00 09240E00 red 05596E00 red 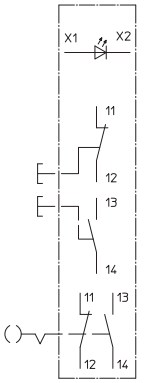 08013E00	**8040/1380X-54C06XXXX-23D01BA05-09XXXBA05**	0.750
Ammeter 8405 and control switch 8008, 2 pole 05770E00	**Ammeter 8405:** Please state: • Measurement range, see ammeter 8405 • Measuring method (direct = d or converter = W) **Control switch 8008, 2 pole** with large actuator, not padlockable Please state: • Contact arrangement, see switch 8008 • Labelling	**8040/1380Z-40XXXXN...-31E...F..**	0.780
Control switch 8008, 4 pole 05775E00	**Control switch 8008, 4 pole** with large actuator, not padlockable Please state: • Contact arrangement, see switch 8008 • Labelling	**8040/2380Z-31E...F..**	0.770

Selection Table

Version		Order number	Weight kg
Ammeter 8405 and control switch 8008, 4 pole 05777E00	**Ammeter 8405:** Please state: • Measurement range, see ammeter 8405 • Measuring method (direct = d or converter = W) **Control switch 8008, 4 pole** with large actuator, not padlockable Please state: • Contact arrangement, see switch 8008 • Labelling	**8040/2380Z-40XXXXN. . -31E. . .F. .**	0.930
Control switch 8008, 4 pole and LED indicating lamp 8010 05778E00	**Control switch 8008, 4 pole** with large actuator, not padlockable Please state: • Contact arrangement, see switch 8008 • Labelling **LED indicating lamp 8010:** • All colour filters included (red, yellow, green, blue, clear)	**8040/2380Z-54C06XXXX-31E. . .F. .**	0.800

Explosion Protection	
Explosion protection	
Global (IECEx)	
Gas and dust	IECEx PTB 06.0025 Ex de ia/ib [ia/ib] m II, IIA, IIB, IIC, T6, T5, T4 Ex tD A21 IP65 T 80 °C, T 95 °C
Europe (ATEX)	
Gas and dust	PTB 01 ATEX 1105 Ⓔx II 2 G Ex edqm ia/ib [ia/ib] II, IIA, IIB, IIC, T6, T5, T4 Ⓔx II 2 D Ex tD A21 IP65 T80°C, T95°C, T130°C
Certificates and approvals	
Certificates	IECEx, ATEX, Brazil (UL do Brasil), China (CQST Ex), Canada (CSA), Kazakhstan (GOST-K), Russia (GOST-R), Ukraine (GOST-U), USA (UL), Belarus (GOST-B)

Technical Data	
Electrical data	
Rated operational voltage	max. 690 V AC
Rated operational current	depends on components used
Ambient conditions	
Ambient temperature	- 20 ... + 40 °C - 50 ... + 60 °C on request
Mechanical data	
Degree of protection	IP66
Material	
Enclosure	Polyester resin, glass fibre reinforced
Seal	PU foam
Cover fixing	with captive M4 stainless steel socket head cap screws
Connection cross-section	max. 2.5 mm^2
Tightening torque	max. 1.2 Nm
Assembly / Installation	
Flange	
Standard	without
Option	with flange made of polyester resin or brass, can be fitted on sides C and D

Dimensional Drawings (All Dimensions in mm) - Subject to Alterations

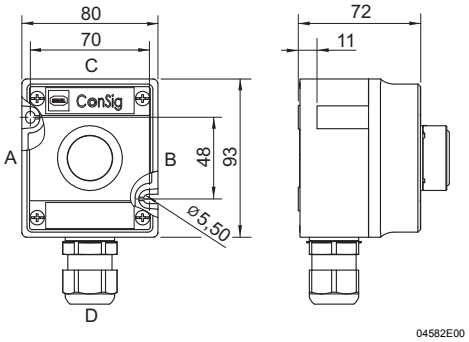

ConSig 8040/11

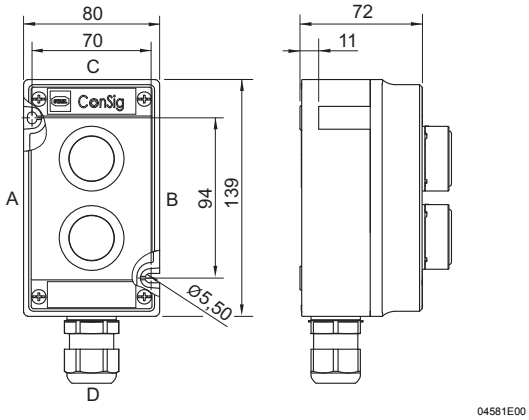

ConSig 8040/12

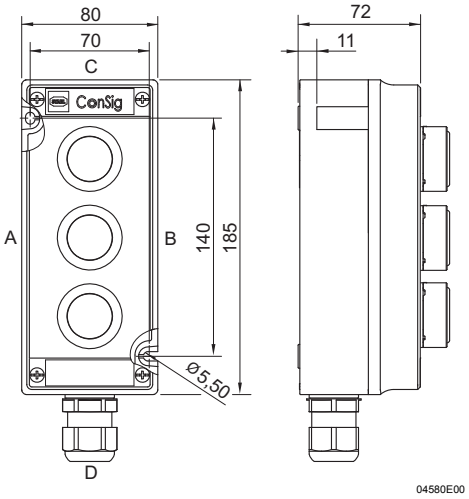

ConSig 8040/13

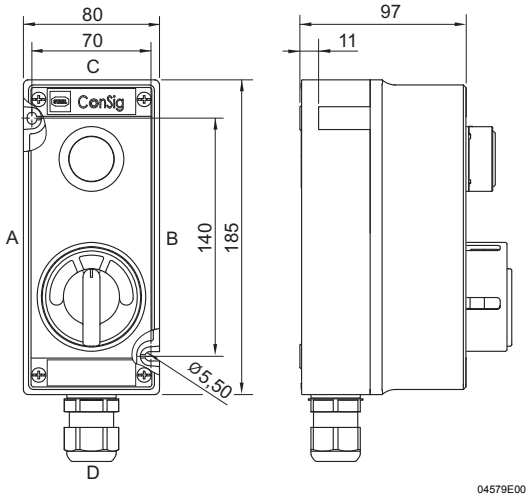

ConSig 8040/23

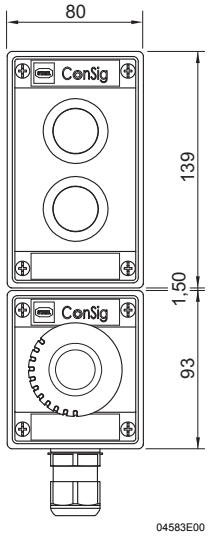

ConSig 8040/11 and ConSig 8040/12 combination

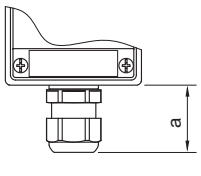

Additional dimensions for cable entries and cable glands Series 8161

	Dim. a [mm]	
	min.	max.
M20	25	31
M25	27	33

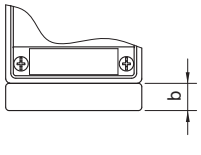

Additional dimensions for flanges

Flanges	Dim. b [mm]
Brass	16
Moulded material	16

We reserve the right to make alterations to the technical data, dimensions, weights, designs and products available without notice. The illustrations cannot be considered binding.